WASTE WATER & SLUDGE TREATMENT

Municipal and Industrial Waste Water Mechanical Pre-treatment

WASTEMASTER TSF 2-3

SAVECO™
Member of WAMGROUP®

Municipal and Industrial Waste
Water Mechanical Pre-treatment
WASTEMASTER TSF 2-3

COMPACT PLANT FOR WASTE WATER TREATMENT

WASTEMASTER TSF consists of a screw screen, a sedimentation tank, a sand extracting screw and a grease scraper. A floating screw is available as an option for degreasing.

	Solids Separation	Sedimentation	De-greasing
TSF 2	X	X	-
TSF 3	X	X	X

The first phase in the waste water treatment process is mechanical pre-treatment including:

- Solid-liquid separation, compaction and de-watering of solids larger in size than the screen slots;
- Sedimentation, lifting and de-watering of sand;
- Grease removal (TSF 3 only).

Subsequently the waste water is ready for further treatment (chemical, physical or biological), while solids are discharged for disposal.

Overall Dimensions

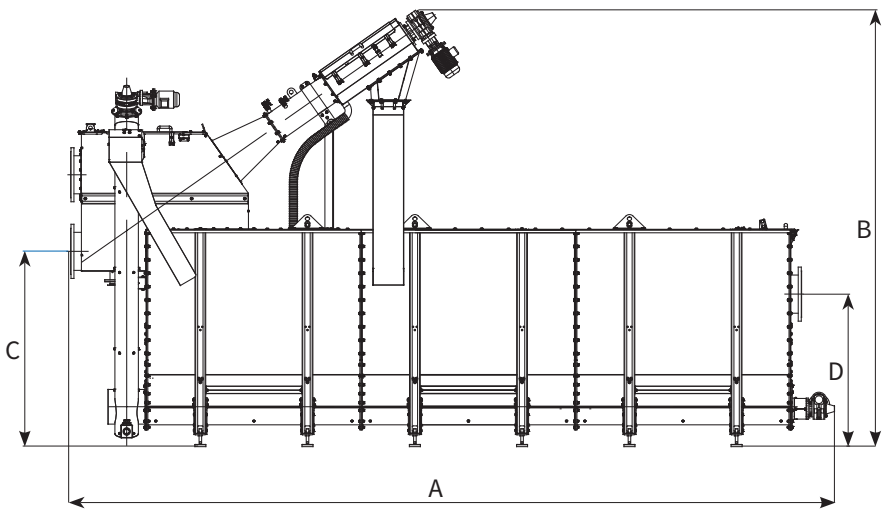

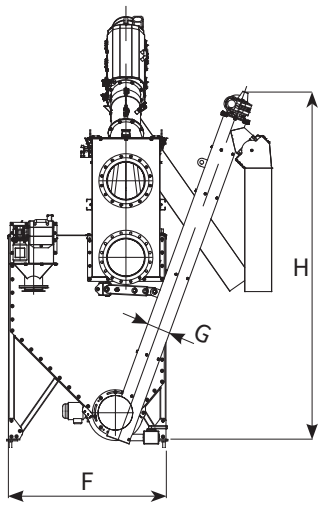

MODEL	A	A*	B	C	D	F	G	H
S 10	2,920	3,735	3,300	1,580	1,330	1,100	168	2,925
S 20	4,920	5,735	3,300	1,580	1,330	1,100	168	2,925
M 10	5,130	5,785	4,075	1,825	1,425	1,420	219	3,375
M 20	7,130	7,785	4,075	1,825	1,425	1,420	219	3,375
M 30	9,130	9,785	4,075	1,825	1,425	1,420	219	3,375
L 10	9,130	9,790	4,670	2,385	1,820	1,940	219	3,755
L 20	11,130	11,790	4,670	2,385	1,820	1,940	219	3,755
L 30	13,130	13,790	4,670	2,385	1,820	1,940	219	3,755

** for version with floating screw - Dimensions in mm*

Benefits

- ✓ **Decreased infrastructure costs**
- ✓ **Easy on-site machine assembly using standard tools**
- ✓ **Best footprint-net volume ratio for this type of machine**
- ✓ **Durable heavy-duty shaftless screws manufactured in patented process**
- ✓ **Self-adjusting scraper device**
- ✓ **SINT™ floating screw for heavy-duty applications (option)**

Features

- Flow rates of up to 210 litres per second (445 cfm)
- Inlet screen mesh: 0.5 ~ 10 mm
- Sand separation with TSF2/ 3: 95% particle size ≥ 200 µm
- Grease removal with TSF3
- Up to 35% solids volume reduction
- Modular design
- Floating screw made of SINT™ engineering polymer ensures high removal of floating matter (option)

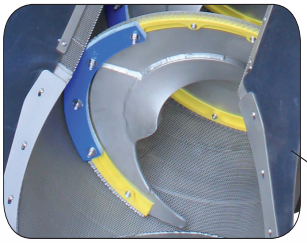

Segmented brushes
for screen cleaning

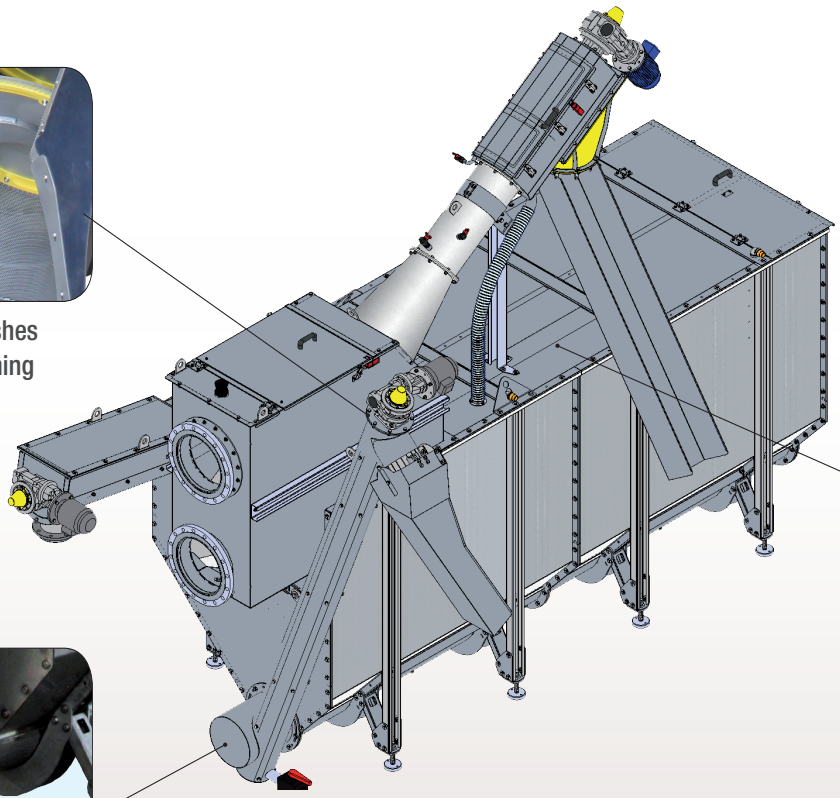

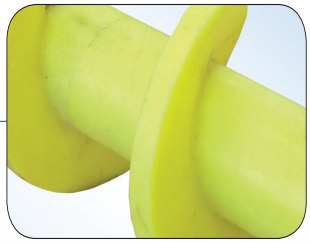

Floating Screw System
(OPTION)

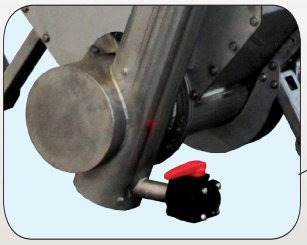

Extracting screw
with variable inclination

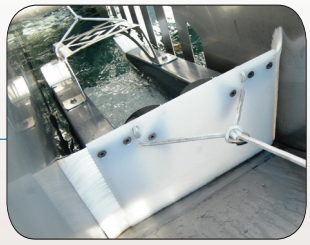

Self-adjusting grease scraper
with limited water removal

Accessories

- Blower
- Grease Pump
- Solenoid Valves
- Level Sensor
- Bagger

Application

203001338 September 2018 Rights reserved to modify technical specifications.

This brochure has been edited for distribution in European Union countries

SPECO® SAVI SEPCOM® WAM® MAP TOREX® EXTRAC® RONCUZZI

SAVECO™
Member of WAMGROUP®

UNI EN ISO 9001
Certified Company

www.saveco-water.com